ITEM NO.	PART NUMBER	DESCRIPTION	QTY.
10	MACH-004200	Body, CTS, CO34	1
20	MACH-005380	Piston, CTS, CO34	1
30	SEAL-005450	CO34-ORING 227	2
40	SEAL-005460	CO34-ORING 339	1
50	MACH-004264	Cap, CTS, CO34	1
60	HDW-005511	Screw, Socket Set, 10-32 x 0.1875in	1
70	SEAL-005231	Seal, CTS, CO34-AD	3
80	MACH-004530	Washer, CTS, CO34-AD	2

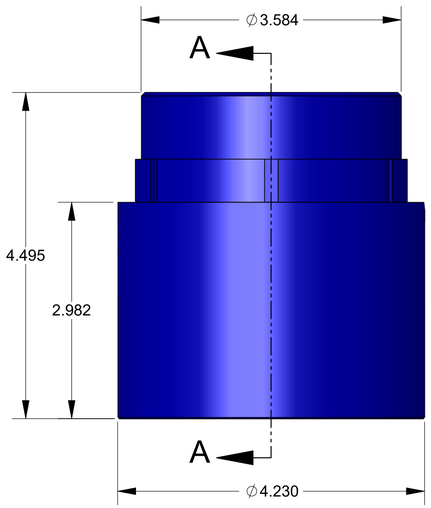

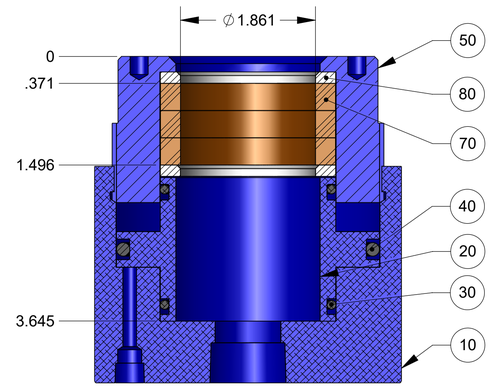

SECTION A-A

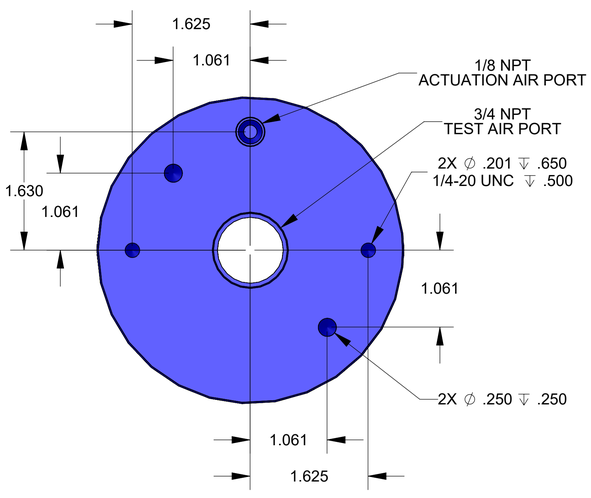

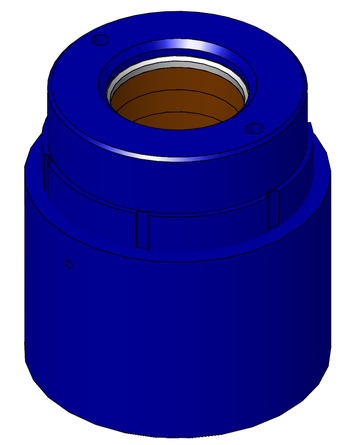

CINCINNATI TEST SYSTEMS
10100 PROGRESS WAY HARRISON, OH 45030

SIZE	DESCRIPTION	
D	Connect Assembly, CTS, CO34-AD	
PART NUMBER		REV
CTSC-002981		A
DATE	DRAWN BY	CHECKED BY D.A.S.	SHEET 1 OF 1

FILE LOCATION: C:\Solidworks PDM\PDM\R&D Product Development\CTS Connects\CO\Connect Assembly\CO34\CTSC-002981\

Monday, June 9, 2025