ITEM NO.	PART NUMBER	DESCRIPTION	QTY.
10	MACH-004195	Body, CTS, CO32	1
20	MACH-005378	Piston, CTS, CO32	1
30	SEAL-005456	CO32-ORING 132	1
40	SEAL-005455	CO32-ORING 120	2
50	MACH-004262	Cap, CTS, CO32	1
60	HDW-005511	Screw, Socket Set, 10-32 x 0.1875in	1
70	SEAL-005155	Seal, CTS, CO32-AG	1
80	MACH-004510	Washer, CTS, CO32-AG	2

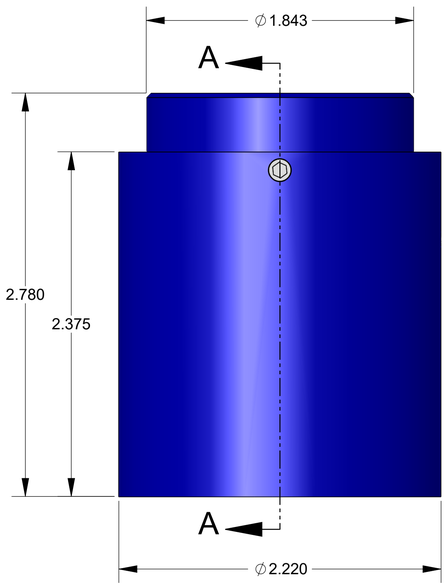

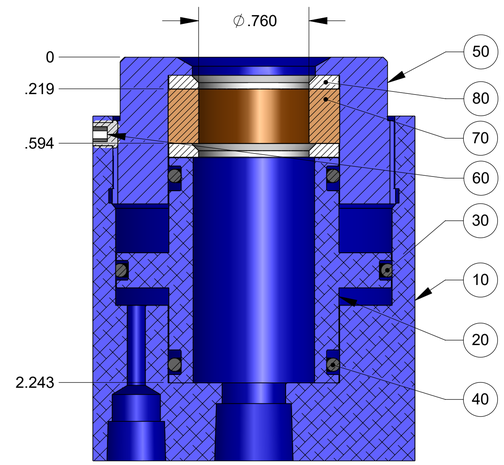

SECTION A-A

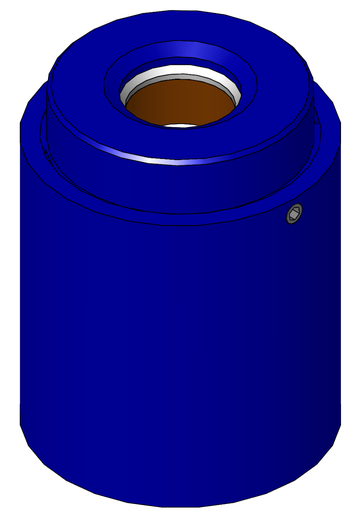

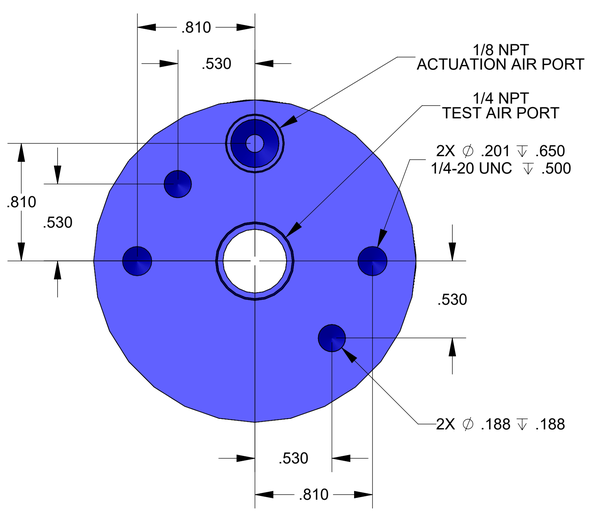

CINCINNATI TEST SYSTEMS
10100 PROGRESS WAY HARRISON, OH 45030

SIZE	D
DESCRIPTION	Connect Assembly, CTS, CO32-AG
PART NUMBER	CTSC-002860
REV	A
DATE	7/13/05
DRAWN BY	
CHECKED BY	DAS
SHEET	1 OF 1

FILE LOCATION: C:\Solidworks PDM\PDM\R&D Product Development\CTS Connects\CO\Connect Assembly\CO32\CTSC-002860\

Sunday, June 8, 2025