ITEM NO.	PART NUMBER	DESCRIPTION	QTY.
10	MACH-004182	Body, CTS, CI32	1
20	MACH-004249	Cap, CTS, CI32	1
30	MACH-004623	Stem, CTS, CI32	1
40	SEAL-005436	CI31-ORING 109	1
50	SEAL-005438	CI31-ORING 216	1
60	MACH-004313	Nose, CTS, CI32-MET-H	1
70	SEAL-004838	Seal, CTS, CI32-MET-H	1
80	MACH-004441	Washer, CTS, CI32-MET-H	1

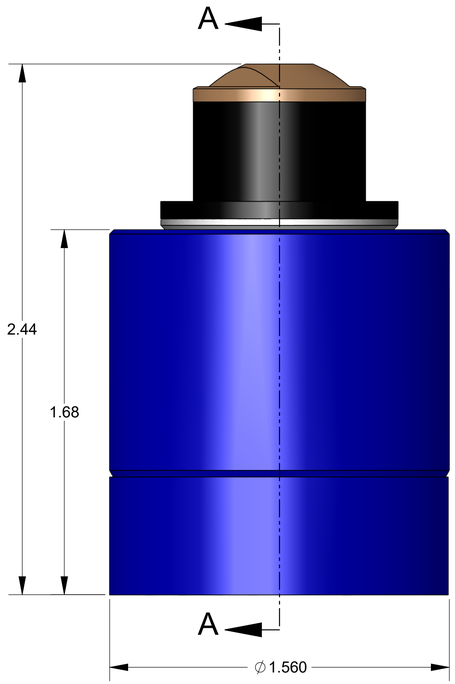

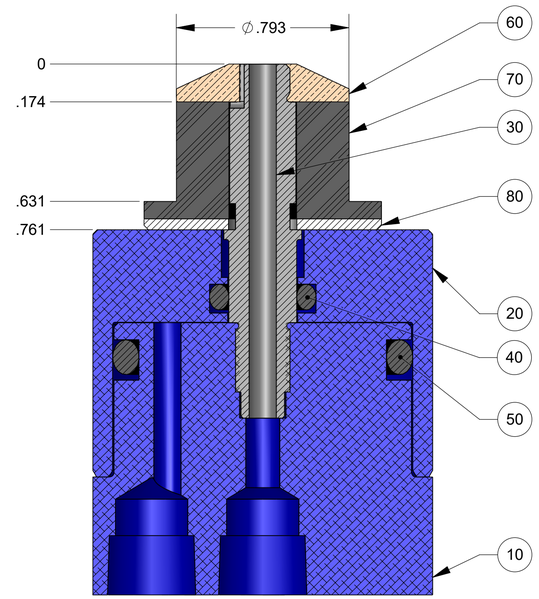

SECTION A-A
SCALE 3 : 1

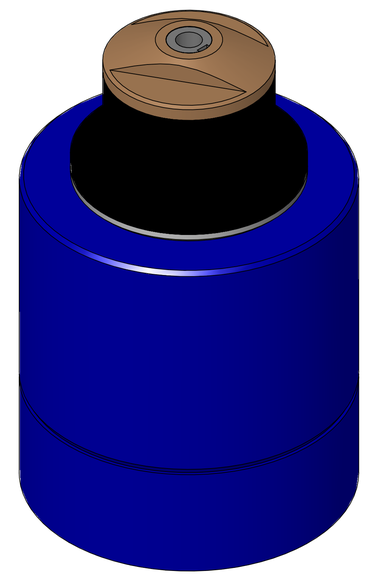

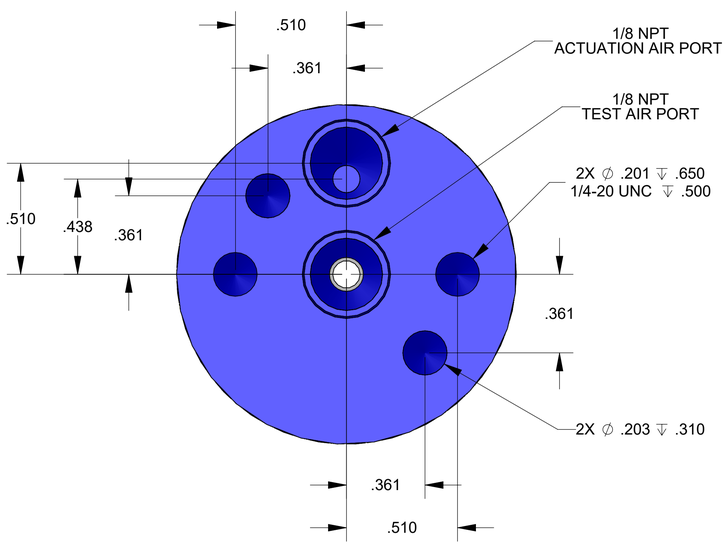

CINCINNATI TEST SYSTEMS
10100 PROGRESS WAY HARRISON, OH 45030

SIZE	DESCRIPTION	
D	Connect Assembly, CTS, CI32–M22	
PART NUMBER		REV
CTSC–002213		A
DATE	DRAWN BY	CHECKED BY D.A.S.	SHEET 1 OF 1

FILE LOCATION: C:\Solidworks PDM\PDM\R&D Product Development\CTS Connects\CI\Connect Assembly\CI32\CTSC–002213\

Wednesday, June 4, 2025