ITEM NO.	PART NUMBER	DESCRIPTION	QTY.
10	MACH-004181	BODY, CTS, CI31	1
20	MACH-004248	Cap, CTS, CI31	1
30	MACH-004618	Stem, CTS, CI31	1
40	SEAL-005436	CI31-ORING 109	1
50	SEAL-005438	CI31-ORING 216	1
60	MACH-004297	Nose, CTS, CI31-MET-C	1
70	SEAL-004781	Seal, CTS, CI31-MET-C	1
80	MACH-004430	Washer, CTS, CI31-MET-C	1

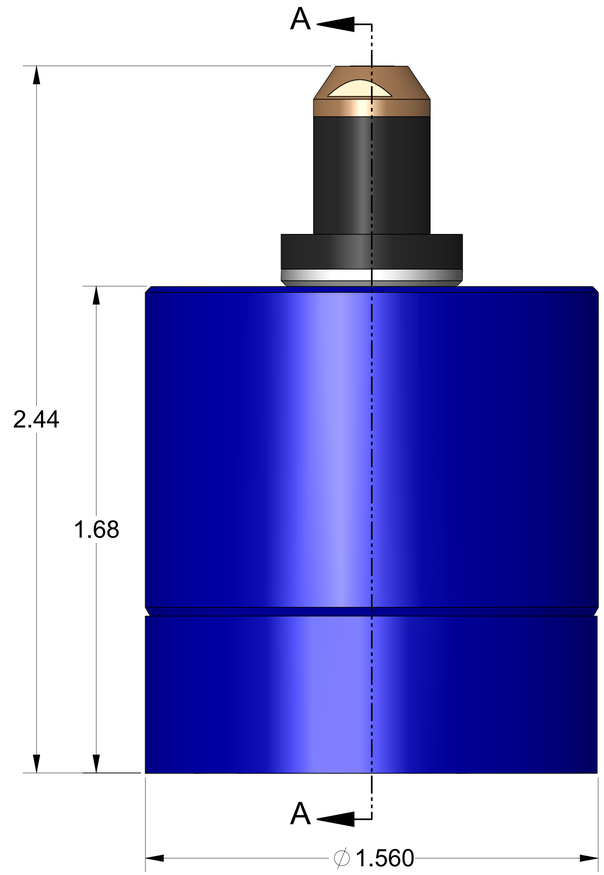

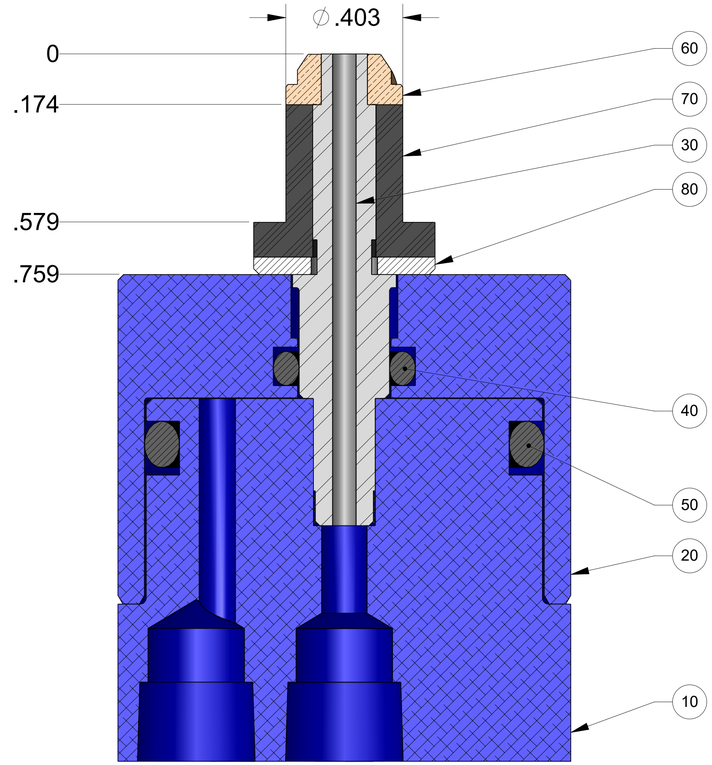

SECTION A-A
SCALE 4 : 1

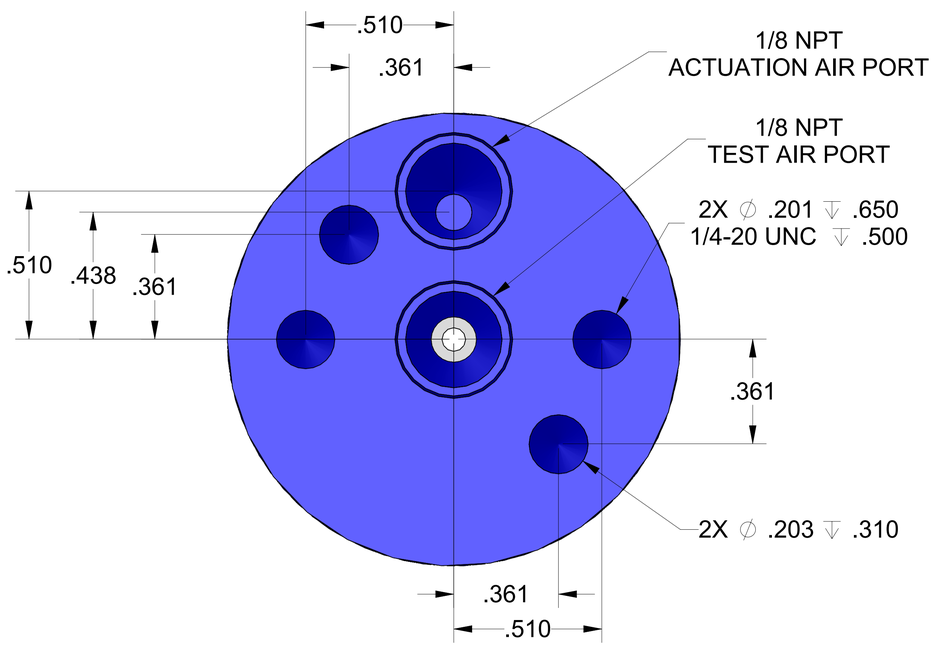

CINCINNATI TEST SYSTEMS
10100 PROGRESS WAY HARRISON, OH 45030

SIZE	DESCRIPTION	
D	Connect Assembly, CTS, CI31-M12	
PART NUMBER		REV
CTSC-002143		A
DATE	DRAWN BY	CHECKED BY D.A.S.	SHEET 1 OF 1

FILE LOCATION: C:\Solidworks PDM\PDM\R&D Product Development\CTS Connects\CI\Connect Assembly\CI31\CTSC-002143\

Wednesday, June 4, 2025