ITEM NO.	PART NUMBER	DESCRIPTION	QTY.
10	MACH-004180	BODY,CTS,CI30	1
20	MACH-004247	Cap, CTS, CI30	1
30	MACH-004283	Nose, CTS, CI30-MET-B	1
40	MACH-004422	Washer, CTS, CI30-MET-B	1
50	MACH-004612	Stem, CTS, CI30	1
60	SEAL-004739	Seal, CTS, CI30-MET-B	1
70	SEAL-005446	CI30-ORING 009	1
80	SEAL-005447	CI30-ORING 119	1

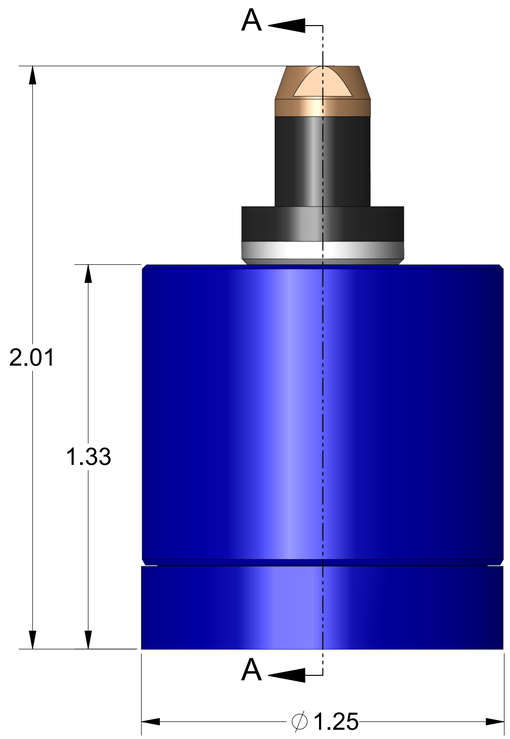

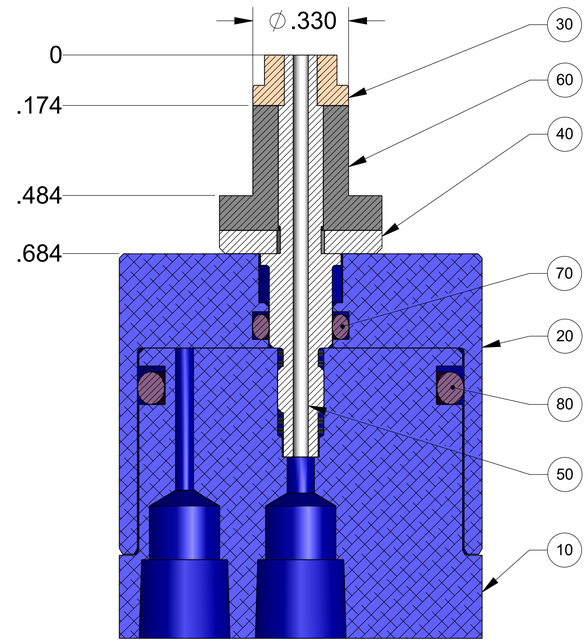

SECTION A-A
SCALE 4 : 1

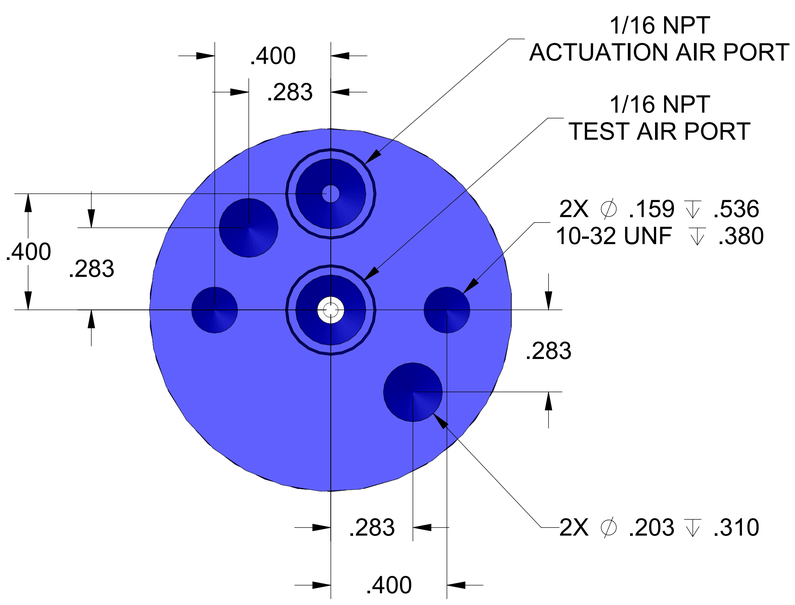

CINCINNATI TEST SYSTEMS
10100 PROGRESS WAY HARRISON, OH 45030

SIZE D	DESCRIPTION Connect Assembly, CTS, CI30-M10		
PART NUMBER CTSC-002129			REV A
DATE	DRAWN BY	CHECKED BY JAW	SHEET 1 OF 1

FILE LOCATION: C:\Solidworks PDM\PDM\R&D Product Development\CTS Connects\CI\Connect Assembly\CI30\CTSC-002129\

Wednesday, June 4, 2025