ITEM NO.	PART NUMBER	DESCRIPTION	QTY.
10	MACH-004182	Body, CTS, CI32	1
20	MACH-004249	Cap, CTS, CI32	1
30	MACH-004623	Stem, CTS, CI32	1
40	SEAL-005436	CI31-ORING 109	1
50	SEAL-005438	CI31-ORING 216	1
60	MACH-004579	Spacer, CTS, CI32	1
70	MACH-004309	Nose, CTS, CI32-AE	1
80	SEAL-004828	Seal, CTS, CI32-AE	1
90	MACH-004438	Washer, CTS, CI32-AE	1

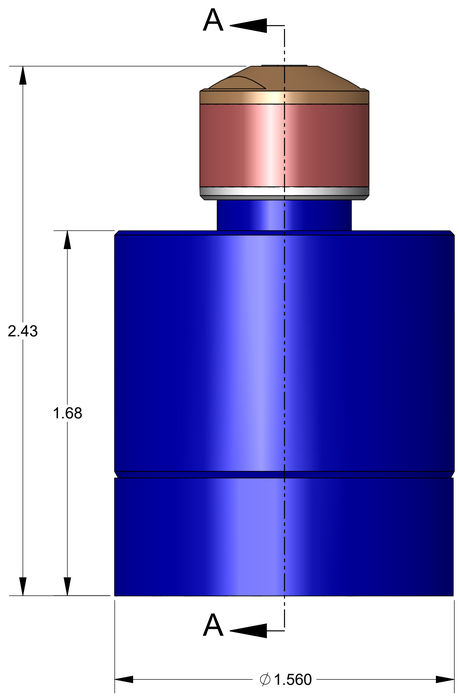

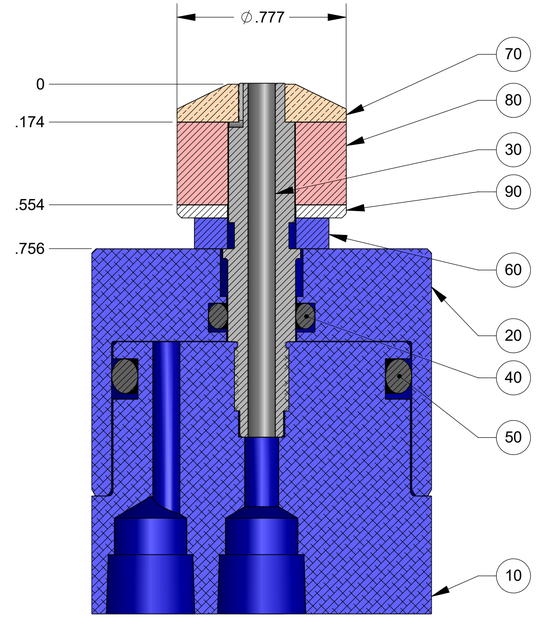

SECTION A-A
SCALE 3 : 1

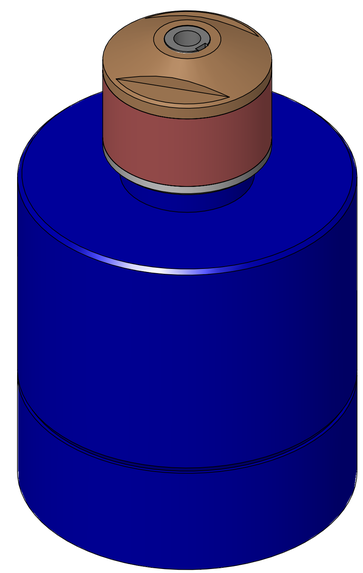

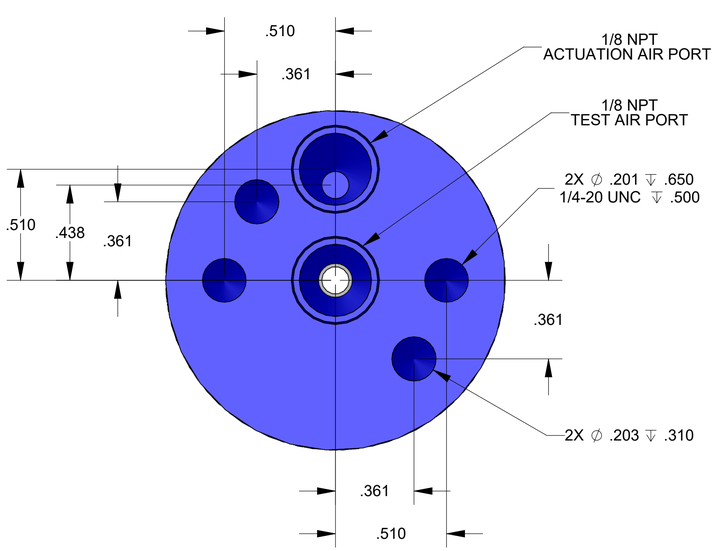

CINCINNATI TEST SYSTEMS
10100 PROGRESS WAY HARRISON, OH 45030

SIZE	D
DESCRIPTION	Connect Assembly, CTS, CI32-AE
PART NUMBER	CTSC-001627
REV	A
DATE	
DRAWN BY	
CHECKED BY	D.A.S.
SHEET	1 OF 1

FILE LOCATION: C:\Solidworks PDM\PDM\R&D Product Development\CTS Connects\CI\Connect Assembly\CI32\CTSC-001627\

Wednesday, June 4, 2025