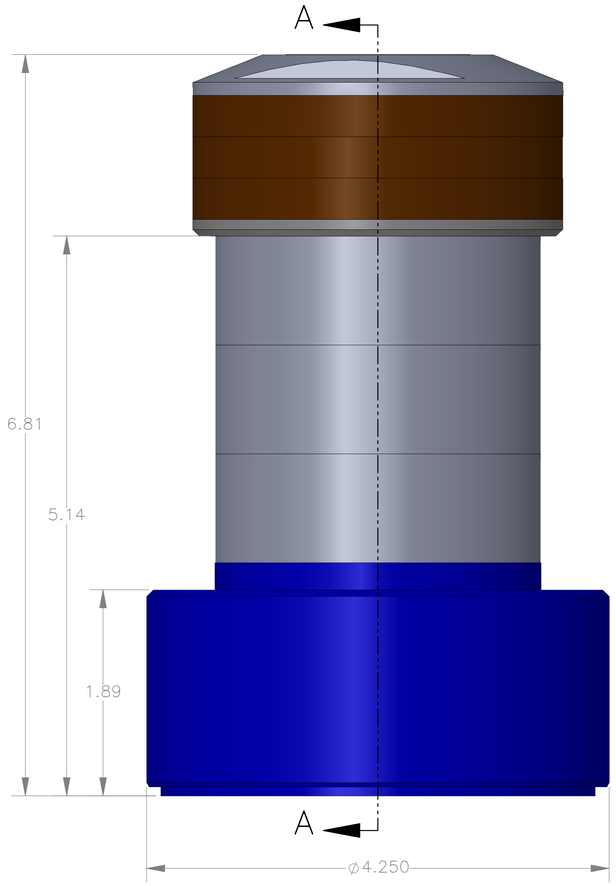

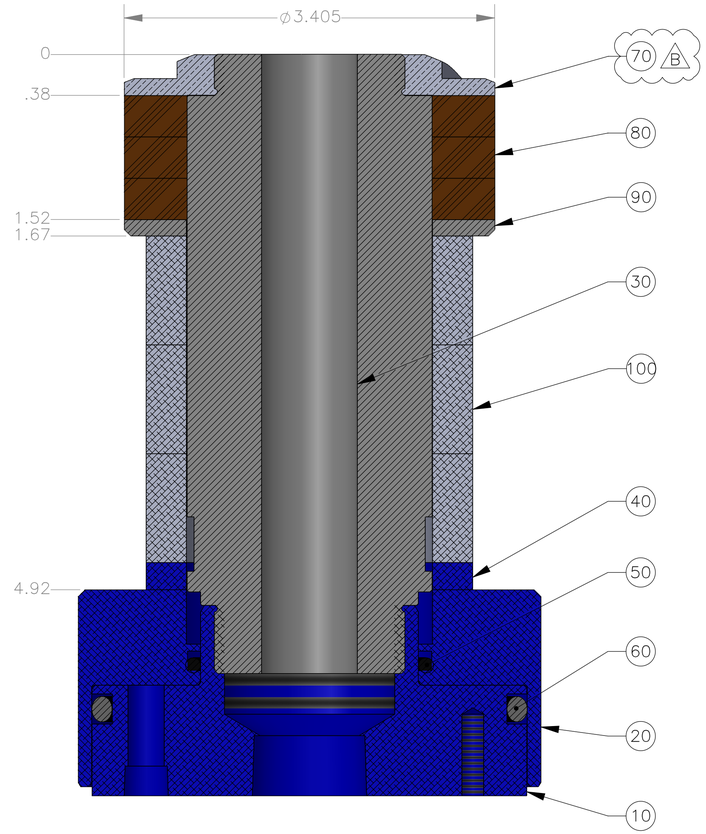

SECTION A–A
SCALE 3 : 2

ITEM NO.	PART NUMBER	DESCRIPTION	QTY.
10	MACH–004189	Body, CTS, CI39	1
20	MACH–004256	Cap, CTS, CI39	1
30	MACH–054235	Stem, CTS, CI39/40–E3.0	1
40	MACH–004604	Spacer, CTS, CI39/40	1
50	SEAL–005442	CI39–ORING 226	1
60	SEAL–005444	CI37/38–ORING 342	1
70	MACH–004365	Nose, CTS, CI39–AD	1
80	SEAL–005008	Seal, CTS, CI39–AD	3
90	MACH–004480	Washer, CTS, CI39–AD	1
100	MACH–004605	Spacer Extension, CTS, CI39–CI40	3

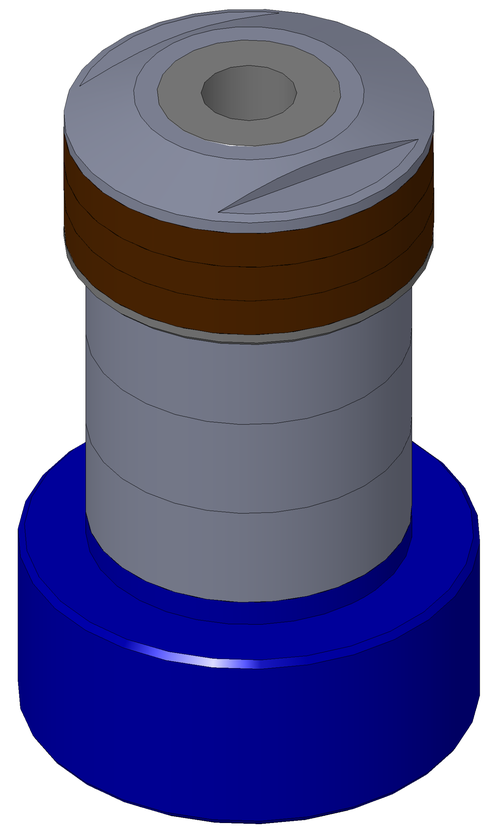

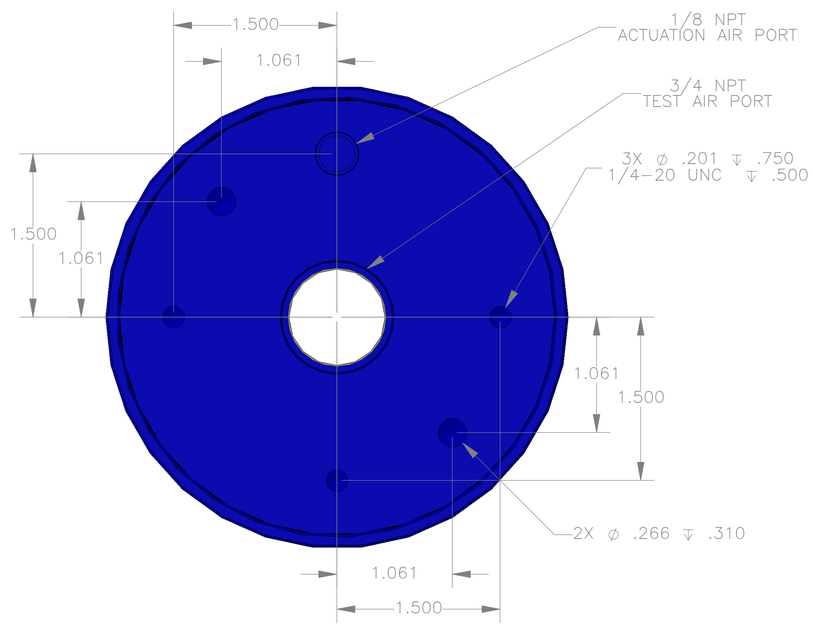

REVISIONS			
REV.	DESCRIPTION	DATE	APPROVED
A	Initial Release	03-11-2026	KM
B	Nose material changed from brass to 316 stainless steel	03-12-2026	KM

CINCINNATI TEST SYSTEMS
10100 PROGRESS WAY HARRISON, OH 45030

SIZE D
DESCRIPTION Connect Assembly, CTS, CI39–AD–E3.0
PART NUMBER CTSC–002043
REV B
DATE 8/12/05 DRAWN BY KM CHECKED BY KM SHEET 1 OF 1

FILE LOCATION: C:\PDM\PDM\R&D Product Development\CTS Connects\CI\Connect Assembly\Standard\CI39\3in Stem Extension\CTSC–002043\

Thursday, March 12, 2026