ITEM NO.	PART NUMBER	DESCRIPTION	QTY.
10	MACH-004181	BODY, CTS, CI31	1
20	MACH-004248	Cap, CTS, CI31	1
30	MACH-004618	Stem, CTS, CI31	1
40	MACH-004577	Spacer, CTS, CI31	1
50	SEAL-005436	CI31-ORING 109	1
60	SEAL-005438	CI31-ORING 216	1
70	MACH-004290	Nose, CTS, CI31-AA	1
80	SEAL-004759	Seal, CTS, CI31-AA	1
90	MACH-004426	Washer, CTS, CI31-AA	1

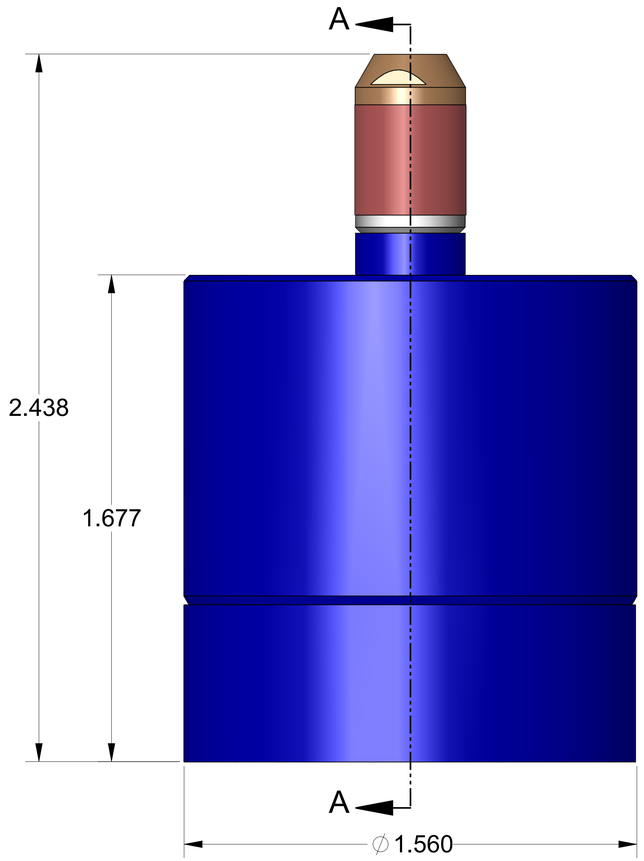

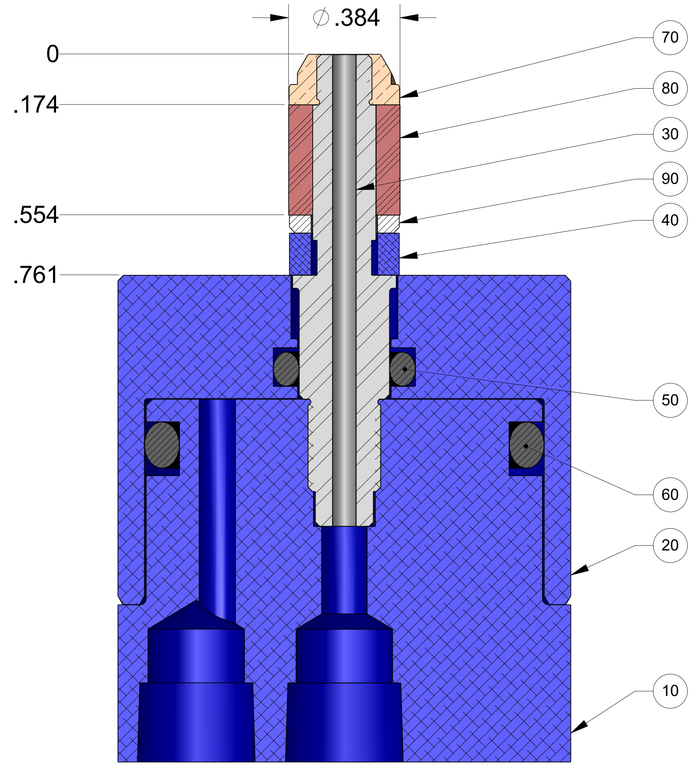

SECTION A-A
SCALE 4 : 1

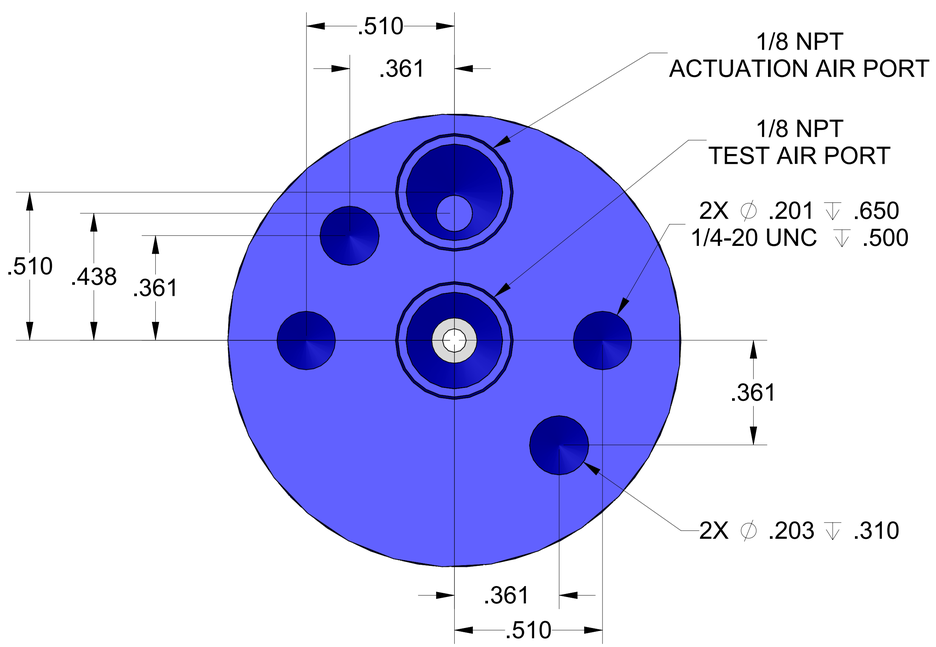

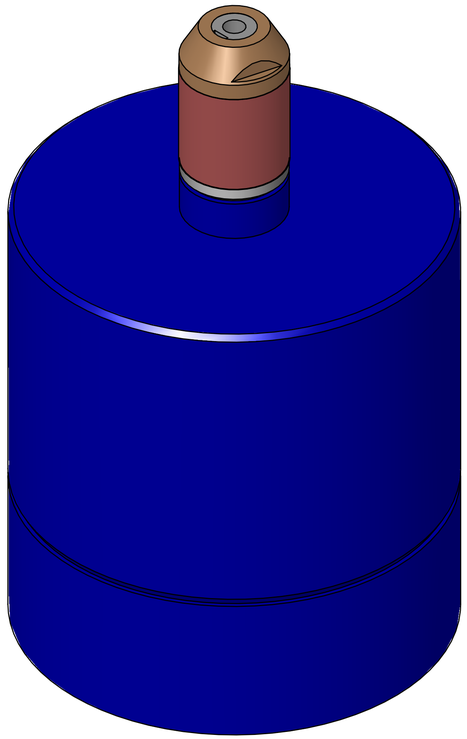

CINCINNATI TEST SYSTEMS
10100 PROGRESS WAY HARRISON, OH 45030

SIZE	DESCRIPTION	
D	Connect Assembly, CTS, CI31-AA	
PART NUMBER		REV
CTSC-001510		A
DATE	DRAWN BY	CHECKED BY D.A.S.	SHEET 1 OF 1

FILE LOCATION: C:\Solidworks PDM\PDM\R&D Product Development\CTS Connects\CI\Connect Assembly\CI31\CTSC-001510\

Wednesday, June 4, 2025